EVOTECH
Computer-Aided Engineering Ltd

Case Study

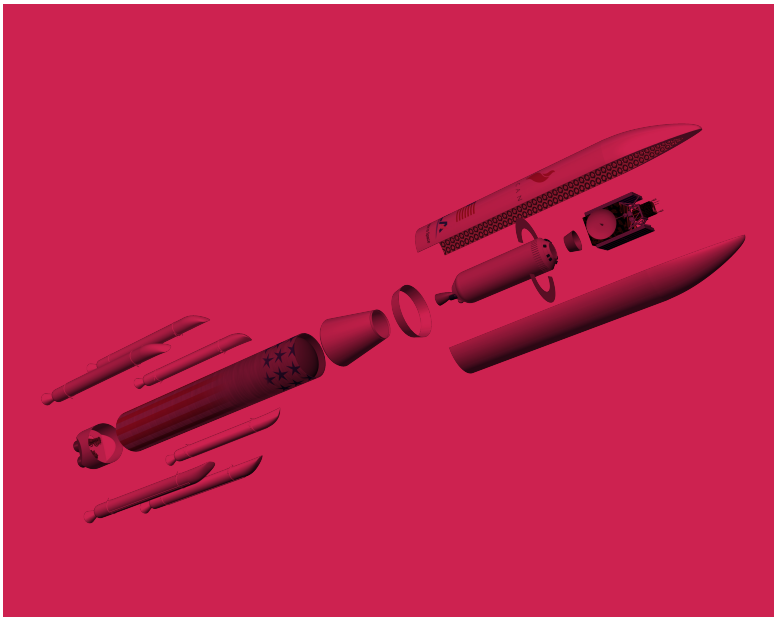

Project Scope: To develop a structural- and print-optimised internal boat-tail support bracket, manufactured using Fused Deposition Modeling (FDM) with the Stratasys Ultem 9085 Polymer.

Toolsets: MSC Apex Fossa (Direct Modeling Optimisation and Design Verification) & MSC Nastran (Topological Optimisation for Concept Design).

Outcome: Optimised structure, which exhibits 90% mass reduction, a minimum safety factor of 1.01 and a print design requiring no additional support structure.

United Launch Alliance, Atlas V Rocket Hardware

Evotech Computer-Aided Engineering Ltd is an Engineering Consultancy based in the UK, specialising in product development through advanced Finite Element Analysis (FEA). With a background predominately in the Aerospace industry, we are expert in multi-scale model development, analysis and structural optimisation, and hold NAFEMS PSE Certification at Advanced level (including Non-Linear Analysis, Composites, Optimisation and FE Model Verification).

Evotech CAE Ltd are highly-experienced in Design Optimisation for product development through Additive Manufacture. This case study highlights the development work with United Launch Alliance to create a structural- and print-optimised design for the boat-tail support brackets, used during ground processing at the base of the Atlas V payload fairing. Much of the work is focussed on the Fossa release of MSC Apex, and its new features.

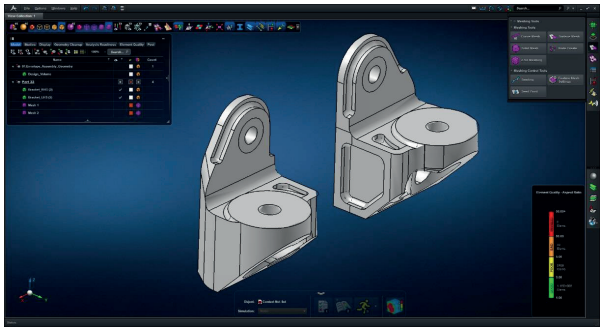

GRABCAD

MSC Nastran

Topology Optimisation for Concept Design

Design Space

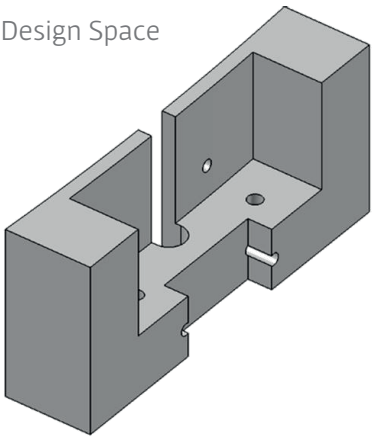

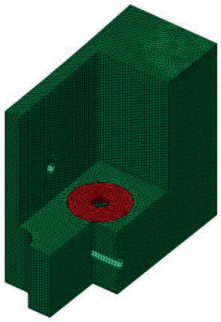

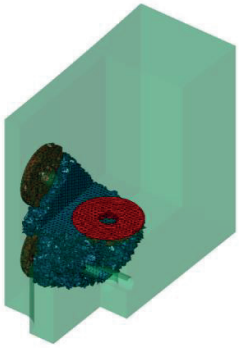

Direct Modeling Optimisation

Initial Concept

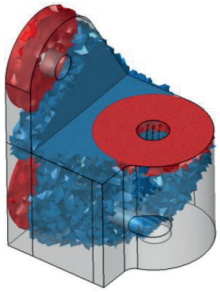

Direct Modeling Analysis Cycles

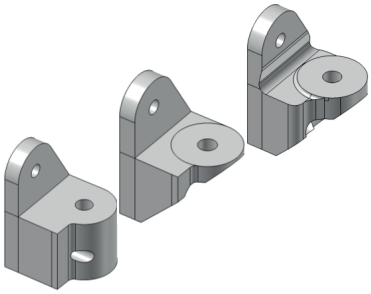

Final Optimised Design

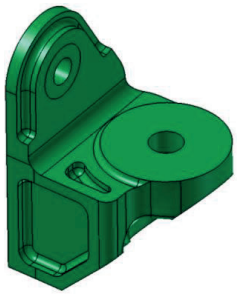

Sequential Optimisation Strategy;

- Topology Optimisation for concept design using minimised compliance solution and a targeted mass fraction of 10%.
- Design interpretation of initial concept, and subsequent Direct Modeling Optimisation, using the advanced features within MSC Apex, including 'Computational Parts' and version control in a single model environment.
- Detailed design verification performed for optimised design using stress-converged output.
- FDM build analysis to demonstrate optimised print performance.

Detailed Design Verification

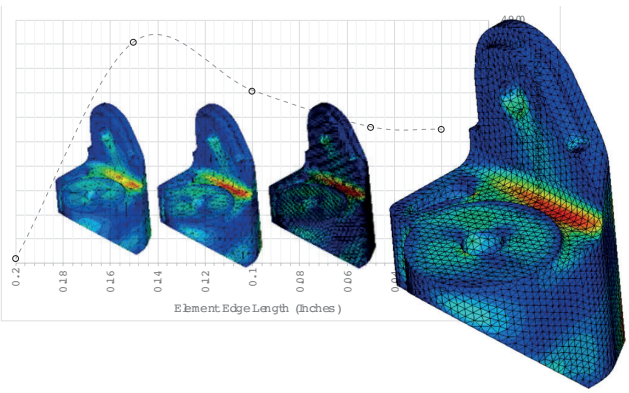

FDM Build Analysis

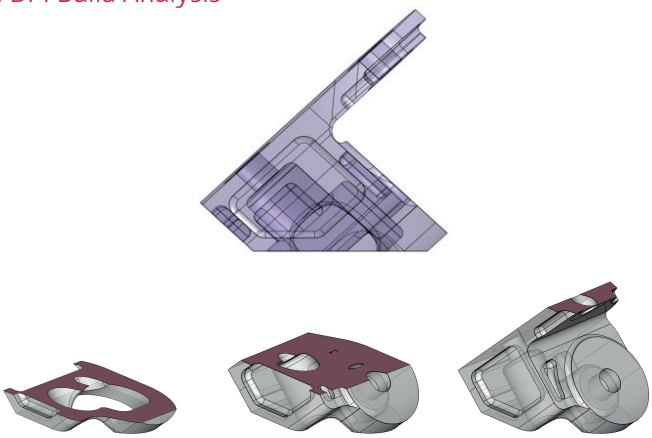

MSC REGISTERED CONSULTANT

PSE CERTIFIED